FILED

THE NEWSLETTER FOR THE SEATTLE AREA TIMEX/SINCLAIR USERS

SWYM

GROUP

JANUARY 1990

President:Derryck Turner
V.P. :Gerry Desmaris
Secretary:Malcolm Post
Treasurer:Dave Battershill
Librarian:Dale Fritz
Editors :Robert Cazares
:Chuck Kereluck

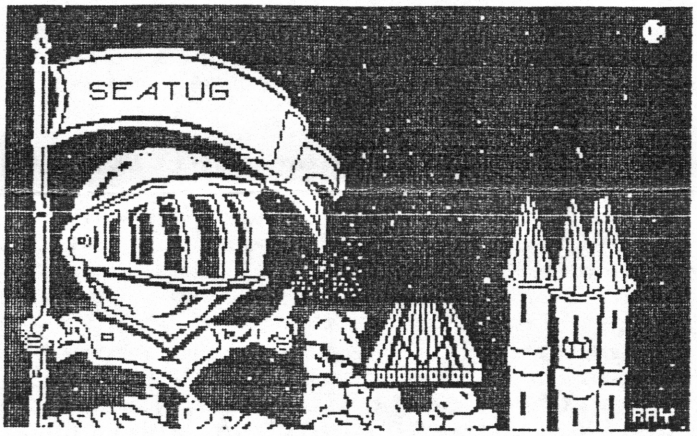

JANUARY MEETING:
JANUARY 4, 1989
THURSDAY 7:30pm

8517 35th Ave. NE. Seattle
UNIVERSITY FEDERAL SAVINGS BANK

SEATUG General Info Address:
Derryck Turner
10909 N.E. 45th St.
Kirkland, Wa. 98033

NEWSLETTER SUBMISSIONS:
Chuck Kereluck
9013 32nd Ave. N.E.
Seattle, Wa. 98115

Newsletter Exchange:
Robert Cazares
118 N.W. 84th St.
Seattle, Wa. 98117-3044

The 2068 DIGITIZER has finally arrived from the Milwaukee User Group. Fellow Sinclair user Jay Siegel helped me obtain this board. If anyone in the club has a B&W or color camera and is willing to bring it to the next meeting so we can test this piece of hardware, please call me at 789-3275. It should be a fun demonstration digitizing images on our "outdated" 2068's.
I understand the cheap B&W security type cameras do a great job. So if you have one of those laying around please bring it.RC

This months contents:

1) S.N.U.G.

2) Minutes

By: Malcolm Post

3) Random Bits

By: Chuck Kereluck

4) Making the T/S 1000&ZX-81 Even Better
By: Malcolm Post

5) Sinclair Echo

By: Robert Cazares

6) SWYM WANT ADS

==========

If you have anything to say send it to us. The newsletter needs your support.

Your 💡's will help keep the ♥ of the club together.

Submissons can be over the ☎ via modem, on 📼 tape, or an article sent in the mail.
If there is no input there is 🚫 newsletter.

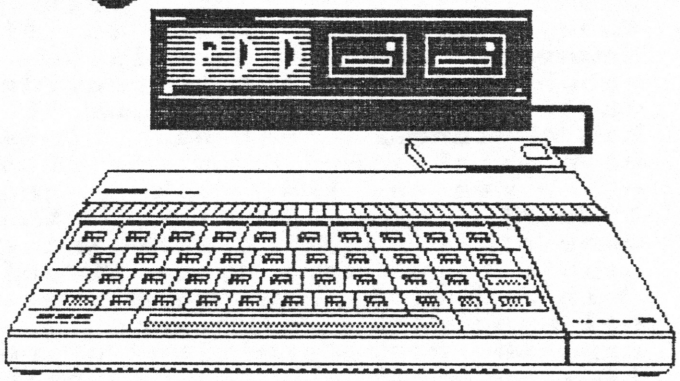

HAPPY NEW YEAR!!!

SPECIAL

AN OPEN LETTER TO ALL INTERESTED PARTIES OF S.N.U.G. (Fall 1989)

by Mel Nathanson

Dear Friends,

During the past few months I have heard some very detrimental words concerning SNUG and its leaders. I would like to address that issue now. This is intended as an explanation of facts, not as an excuse.

When the discussions of the formation of a multi-national orginazation were begun,one of the most prominent things mentioned was the fact that the organization would facilitate the interchange of information. We were not going to be closed-minded about our efforts and wanted to actively accept input from anyone interested enough to contact us.

Of the above ideas, some were successful, some were not. As the lawyers once put it-not only must justice be done, it must be SEEN to be done. I believe that a lot of the problem is not in our efforts. It is the ability to communicate to you our efforts. I hope that by now there isn't anyone who can doubt that the efforts put forth so far are sincere. We are geared toward the maintenance and betterment of the Sinclair community through information.

We made some tenative efforts by dealing with an established publication, who offered us the entire magazine "lock, stock and barrel." It was a major decision which prompted a cross-country phone conference. At first we thought we could pull it off. However, the responsibility of neophyte publishers to provide a quality 50+ page magazine that had a standard that had already been established, was one of the major reasons that we had second thoughts. In addition, there were other complications and the negotiations were discontinued.

In addition,there were personnel problems. Volunteers to accept the responsibility of putting together a quality publication were few and far between. Certain individuals took advantage of new personal business relationships and profited monetarily from them. They also saddled certain leadership with bills that were not their responsibility. In no way has any membership money been used at all. Start up monies has been from out of pocket expenses.

We had attempted to make a newsletter available for the CATS Fest in Washington, but again the volunteers ran into time constraints that prevented us from our goals. So far there have been a total of four members that have attempted some sort of publication in one format or another.

The idea of this publication was to be our communication line to you. Hopefully it would also provide the platform necessary to you, the user, to get the information you needed. There are those, among our critics, that have stated that we needed to provide our information on electronic bulletin boards. We have determined that not all Sinclair ists have access to or want to get involved in modeming. Although there are many, many advantages to such a system, we would like to look at that system as an ADJUNCT to publication and I believe that at this time, our prioity is to get something, ANYTHING out.

This brings up an important point. I feel it extremely necessary to have a QUALITY publication. For a long time, we put a great deal of effort into not what the publication would look like but what its contents would be. The first criteria was that we would attempt NOT to reprint other publications' articles to fill space. Unfortunately, there is a great burden placed on the users groups to provide fresh material. And when the deadline approaches and there is nothing new to print, an alternative was to incorporate previously published articles. Some of these articles would not have been read by all the membership, and the spread of information would then be accomplished. However, if no new articles were at hand, the editor (who really started doing this for probably the same reasons we started SNUG; i.e. no one else was doing it) felt the pressure to at least come up with something and wrote a small article. And so the spread of Sinclair information goes on.

We would like to present to you all new information. That requires some of your assistance.

continued next page..

Mathematically, the odds of one or two individuals producing interesting to read articles all the time tend to break down over a period of time. The "guru" of, say, modeming may get burned out from supplying info and long for the release of the burden of pressure to produce. This is the transitional year - 1989. Many of our once prominent software writers, publishers and hardware hackers have felt the all-too-familiar problem of "I'm not getting any return for all the effort being put into this." The return can be financial, acknowledgement of effort, or for that matter, just plain old communications. So, for one reason or another, they have dropped out as interested parties.

The following few thoughts are as disturbing to me as they, hopefully, will be thought-provoking to you. I have always thought of the average Sinclairist as someone who wants to get the most for his/her dollar as possible. They have seen the elegance and power of their systems, and are maverick and possibly defiant enough to say with pride that we can do whatever the "Big Boys" can; maybe not quickly, but enough to be impressed with the results. I can say, without reserve, that the people in our community impress me with the drive to squeeze that last once of power out of what was once referred to as a "toy" and a "doorstop." However, as a whole, there has been, in the past,a sense of complacency: Let someone else do it; I don't know how to program; I really only want to play games. The pioneering leaders, all of whom should be congratulated for perseverence, managed to overcome these attitudes during the early years and still provide what was needed and wanted. I sense a degree of urgency in our efforts. There is a tendency to fade-off into never-never land in the electronic age. A recent article depicted a museum's difficulty in obtaining examples of coin-operated video arcade games from only FIVE short years ago. These "classics" were considered antiques. Is it in the realm of possibility that there won't be but a handful (less than 300) of Sinclairists in the North American continent in the next year or two? And why is it that other "orphans of the storm" can survive and flourish, while we allow ourselves to diminish all the fine efforts of those who chose to have the "power within our grasp?" I am not one to be a doomsayer, but this is a case of waking up the sleeping giant and causing some reaction, and, hopefully, we will see some action. These statements should get some of us to think. There are those who have harsh words for this organization. There are those who feel they can provide a service, in some manner, that we cannot. However, the thing that is in deference to us all, is if we squander our precious resources(time,money and effort) trying to put down someone elses efforts, in this manner, we all lose. I would like to propose that if we could drop the animosities and work towards the betterment of the community at large, then we all gain from it.

So what does that require of you? As the robot from "Short Circuit" is so fond of saying, "...Ahh, INPUT!" We need an orginized effort from you, the readership, be you a member or not. We need RELIABLE volunteers who are willing to accept an assignment and its responsibilities. We have a massive need to build an effective WORKING organization. We desparately need people to help with the Charter (so we can obtain Tax Exemption Status); an Election Committee to prevent the same problems we had in our first election; people who are willing to help organize our software library - hardware library -literature library - database of members, equipment, contacts - typists willing to help translate some of our published material to electronic format for its preservation - representatives to contact former software and hardware houses to release their materials into public domain. As you can see, the goals are large and the effort much. However, if we can get a LOT OF YOU to assist,the individual effort will be small. So, can you spare an hour or two to help the group who wants to help you enjoy your hobby for a long time to come? Think about it.

ed. note: At this point, he described several personal situations.

Again, I am not relating this to you all for sympathy, but to give you an idea why you may not have gotten a reply to your many inquiries. Just to let you know, the brief mention we got in the Sinclair column of Computer Shopper, "MORE TIMEX SINCLAIR", by Michael O'Brien, has garnered

Cont. next page

as much attention as anything SNUG has ever been involved in. We had received as many as three letters or calls a day for the entire month of June. So the backlog of replies is high. With this letter, I hope to inform you of the reasons for the delay.

We have gotten together the knowledgable and capable team of Basil Wentworth and Paul Holgrem to work the newsletter into shape. I understand that they currently have three months of material ready to use. However, the well runs dry quickly and your input is needed to tide them over. I also have heard that Frank Davis has completed inventory on the Public Domain software and is currently doing capsule reviews on ALL of them, which accounts for the length of time to get it together. Thank you Basil, Paul and Frank for all your hard work!

I have discussed the next point with several parties and all agree. As the past year has been greatly spent in preparation, and very little (visibly, anyway) has been given back to the members, we will extend the base membership for an additional year to January 1, 1991. This is return for the overwhelming patience the members have shown us.

If any among you feel that we have not lived up to your expectations for the monies sent in, I have directed the treasurer, John "J.C." Cushran, to refund your membership. We hope that, instead, we will earn your faith in accomplishing the goals that we have outlined to you. With your assistance, we can move forward and grow.

Mel Nathanson is the President of SNUG. Interested parties should contact him at:

7515 Arbordale DR.
Port Richey, FL 34668

Or, you may call him at:

(813)863-5552

MINUTES WITH SEATUG

by Malcolm Post, Secretary

December 7, 1989

The meeting was called to order at 8:00 PM by President Derryck Turner. There were nine members present.

The Treasurer, Dave Battershill, reported that as of November 30, the treasury contained $60.80. Dues for 1990 are now being received.

Time Designs Magazine is now being received by those who have subscriptions.

A letter was received from SNUG, the Sinclair National Users Group, reporting on their status. Also, a card was received from the Vashon Island club (VISTA), indicating that they are now keepers of the SNUG library.

Robert Cazares is keeping a file of newsletters from other clubs. Contact him at 789-3275 if you are interested in seeing any of them.

There being no further business, the meeting was turned over to Pat O'Reilly, who had prepared a demonstration of a radio/teletype program running on his Timex 1000. The program both decodes and encodes Morse code and displays the results on the monitor, using a split screen format; code being sent on the lower half and received code on the upper half. The actual transmision lags the keying to allow for a uniform rate and to give the operator an option for corrections. The demonstration suffered from an electrically noisy location, which made the decoding difficult. The sensitivity of the phased-locked-loop in the interface demanded very careful tuning of the radio receiver, but with a little perseverence, we were able to see the not-so-lowly Timex 1000 can be useful for a variety of things. Thank you, Pat, for an excellent presentation.

The meeting was adjourned at 9:34 PM.

TECHNICAL TALK-NOTES-DIAGRAMS-DATA-SUGGESTIONS-INFORMATION...

Random Bits

TECHNICAL TALK-NOTES-DIAGRAMS-DATA-SUGGESTIONS-INFORMATION...

by Chuck Kerbluck

NEW YEAR'S RESOLUTIONS

1. I will attend every monthly meeting of SEATUG.
2. I will contribute at least one article this year to SWYM
3. I will buy at least one product from a commercial T/S supporter.
4. I will offer my T/S computer for a club meeting demo.
5. I will investigate new ways to make use of my T/S computer.
6. Then, I will share this info with mt other SEATUG members.
7. I will renew my club dues this year.
8. I will build at least one SWYM hardware project.
9. I will not give up on Timex/Sinclair computers.
10. Oh, well, maybe next year!

TO Z88 OR NOT TO Z88

The Cambridge Computer (AKA, Sinclair) Z88, how's it doing? Well, the few people who have bought it, like it. It is said that Mac users like it. Generally, however, sales have been slow. RMG, of Portland, Oregon, doesn't carry it. And how many have you seen in other stores? Sharp's, on the east coast, is still supplying. The general conception seems to be that it's a sleeper. That is very unfortunate but not too terribly surprising, considering the glut of laptop portables out on the market, now. Sure they're overpriced, but there's some real beauties out there to compete with. Take a look at the long-awaited Mac laptop, with that funny little trackball cursor controller. Or even something a little more fiscally down-to-earth, such as the $600 Amstrad laptop portable, with dual 720K drives, 640K RAM and 2400-baud modem??

Still, the towel is not being thrown in, and rumors persist. The latest, is that there is talk of a Z90, with (believe it or not) true, MS-DOS compatibility! When will it become available and will it even be so in this country? Don't hold your breath.

Even so, we must applaud Sir Clive for having the stuff to stay afloat in the man-eating, shark-infested waters that is the personal computer industry.

LETTERS TO THE EDITORS

You don't see much of this around in newsletter-land, but we, at SWYM, would like to start a letters column. Since we also mail out to various individuals around the country, this seems to be a reasonable addition. If anyone out there has any comments, suggestions, criticisms, etc., please send them in to, LETTERS, 9013 32nd Ave. NE, Seattle, WA 98115. Running a newsletter can be a one-sided thing. We really need your feedback!

MORE USES FOR THE TS1000

How about a club project? How many Timex/Sinclair users out there also use IBM? Probably, most. Want a poor man's laptop or "Z88"? Jerry Desmarias came up with an excellent suggestion that deserves some serious consideration. He says, "How about a club project to make TS computers file compatible with IBMs??"

Think of the combined possibilities: Take a TS1000, for example, add one of those flat, LCD screen pocket TV sets (like the kind Radio Shack sells) for a display, a micro-cassette recorder for cheap, mass storage and appropriate software and voila! You've got a portable, laptop computer! For something a little larger, a 2068 could be used. At least the basic alphanumerics would be ASCII compatible. The "appropriate software" would be for exporting (otherwise known as "uploading") your file to the IBM. We may want to include something to generate the file, in ther first place. There are many existing possibilities out there, already. We just need to integrate it into this new application.

How could this be accomplished? Well, hardware-wise, the outgoing data could exit via the MIC port. I remember a project, a while back, that told how to construct a serial (RS232) port out of the same MIC jack. Short-cutting this, one of those plug-in interfaces should work great. Ok, what about RAM? Add some internal expansion. What about software? Since the TS1000 does everything in a non-standard manner, some sort of common conversion table, or sets of tables, would be a central focus. This could be done on an EPROM. Sudenly, this becomes a feasable idea. Any takers?

MAKING THE 1000/ZX81 EVEN BETTER

by Malcolm Post

Those of you reading this article who are users of the ZX-81 must be the world's most patient people or are already using some of the improvements on your computer.

The ZX-81 was designed to be marketed as an entry-level computer. Thus, the small memory, the use of a TV for a display and the use of a portable, monophonic tape recorder for permanent storage. Many optional add ons are available to the owner who wishes to go beyond the minimal machine. The use of a TV was a reasonable decision because of the relatively high price of a monitor. But, by letting the owner use any tape recorder available, Sinclair lost control of the quality of the resulting system. The tape I/O had to be made slow in order to acheive any degree of reliability.

When I first tried my computer, I read all the instructions in the user manual and those suggestions provided with the commercial programs. When loading the small programs into a 2K memory, there were few problems. As the programs got larger, to fill my add-on, 16K memory, the problem frequency increased. About this time,I joined the computer club and many helpful suggestions were received. I tried various volume settings, tone control variations, removing the "ear" connection when LOADing and the "mic" when SAVEing, but problems persisted. Head alignment was not the problem, either because I could read commercial tapes much better than those I had written. This was my first productive clue towards solving the problems. By examining the output of commercial tapes with an oscilloscope and comparing them with the tapes written by the computer, a nice pattern of square waves showed from the commercial tape with higher amplitudes, versus distorted square waves with much electrical "noise" on the home-grown versions. In an effort to get a high enough amplitude from a weak signal, I was amplifying the noise, as well. Referring to Fig.1 on the next page, the solution was to reduce the resistance of R29 by parallelling it with R29A and adding C12A across C12. These changes permitted me to record at a lower level,where distortion was less and the square wave signal was much larger than the noise.

When reading tapes into the computer, I found the signal was greatly attenuated before reaching pin 20 on the Sinclair Logic Array. This was caused by the low resistance of R34, shunting it to ground, so I replaced the 210-ohm resistor with a 4700-ohm resistor I call R34A. These changes solved all my tape reliability problems. However, the component values used in these changes may not be the best for your tape recorder but should be a starting place to eliminate the problems.

I was also being bothered by the large TV I was using and the jittery, waving lines displayed on it. I obtained a used monitor and attached it as shown on the schematic, using a single-pole-double-throw switch, a resistor, an NPN transistor and an extra RCA jack. This was a great improvement,but there were still a wavy pattern on the face of the tube, when I was using the 16K add-on memory. It turns out that it was caused by the oscillator in the memory feeding back on the 5-volt power buss. Putting C4A across C4 solved this and now the display is steady as a rock.

Another useful change, mentioned in several articles, is to add a reset switch so that it isn't necessary to pull the 9-volt plug or shut off the DC power to clear the computer when it hangs up. This is shown connected to the junction of R15/C5 and pin 26 of the Z80A, which also goes to the edge connector. This should be a normally-open momentary-contact switch.

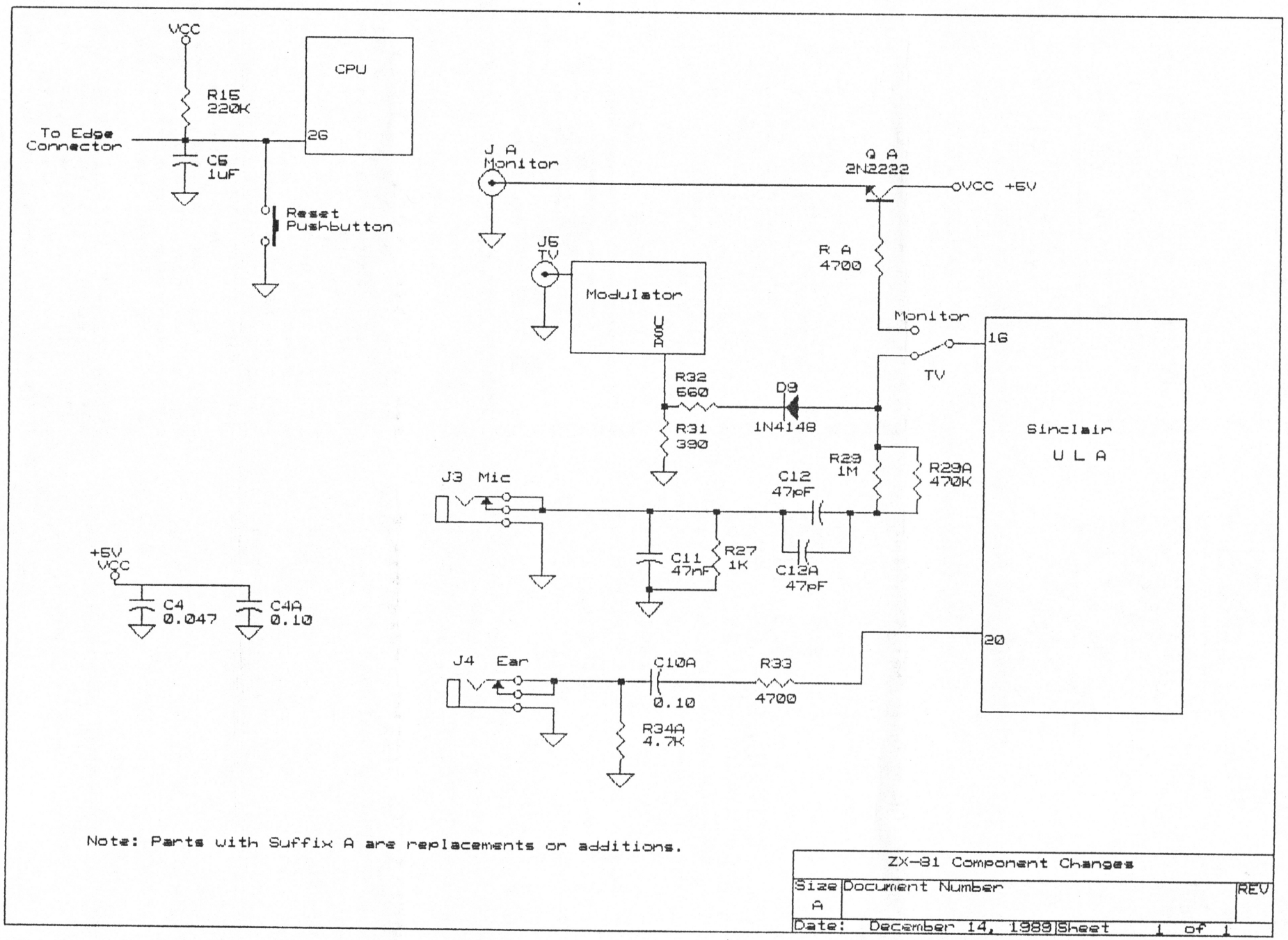

Note: Parts with Suffix A are replacements or additions.

ZX-81 Component Changes		
Size A	Document Number	REV
Date: December 14, 1989	Sheet 1 of 1	

SEATUG'S COMING ATTRACTIONS

Start the new year off with a bang! Start the new decade off on the right path! Make the January 1990 Meeting of SEATUG your own happening! You won't want to miss it!

A "mini-class" will be given about Pixel Print Desktop Publishing Software! All will be revealed! Get in on the fun! Classes forming now!

Also, Dale Fritz will be unveiling the brand new edition of SEATUG's software and literature library. Copies will even be passed out to all who attend. If you use your Sinclair computers at all, you will want this valuable edition of what is currently available.

You do not want to miss this special double-billed, 1st New Year/Decade 1990 Meeting!

SWYM ADS

FOR SALE:

Leading Edge (Gorilla Banana) printer. Works perfectly. Standard parallel Centronics interface. 50 cps - 80 col. 5 X 7 dot matrix. Graphics capability. Tractor forms feed. Uses print cartridges that can be had from stationery store for $3.15. Operating guide. Print quality not NLQ. $50.00
Call Chuck, 523-5272 or write 9013 32nd Ave NE Seattle, WA 98115. Not mine, but selling for friend at work. Scoop up this deal!

FOR SALE:

TS1000 w/16K RAM, 4 program tapes, inc. Supermath & Vu-Calc and 11 books. Call 633-0419 or write Howard Stein, P.O. Box 31663, Seattle, WA 98103

FOR SALE:

One Gorrilla Bananna dot-matrix printer. Good condition. $35.00 Call Al Stone, 382-0916

Sinclair ECHO

The Sinclair Echo is now in the Seattle area, Puyallup to be precise. For those of you who use your modems the Echo will be of interest to you. Simply described the Echo provides Sinclair users with a way to contact other Sinclair users across the country without the large long-distance telephone bills. The system that carries the Echo are the FidNet BBS's. What these systems do is exchange information be it E-Mail or program files between each other on a weekly or bi-weekly basis. Some do the exchange daily usually in the early morning hours. At these times the system is unavailable for anything other than the exchange of files from one FidoNet to another.

The Echo seems to be picking up steam as the word spreads. Rod Gowan has been appointed Echo Moderator of SINCLAIR USERS UNITE! ECHO. It was Rod and Bob Currie sysop of the Bull Pen BBS who started the ECHO.
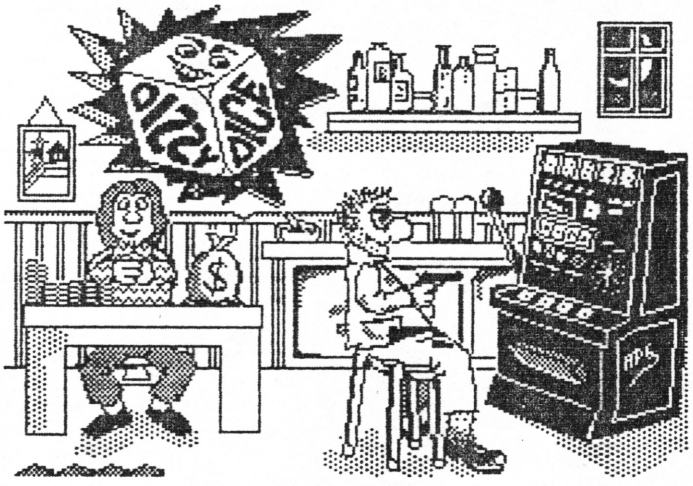
SEATTLE SINCLAIR ECHO
PUGET SOUND GATEWAY FIDONET
(206)848-9232